PLASTICS ENGINEERING TECHNOLOGY (B.S.)

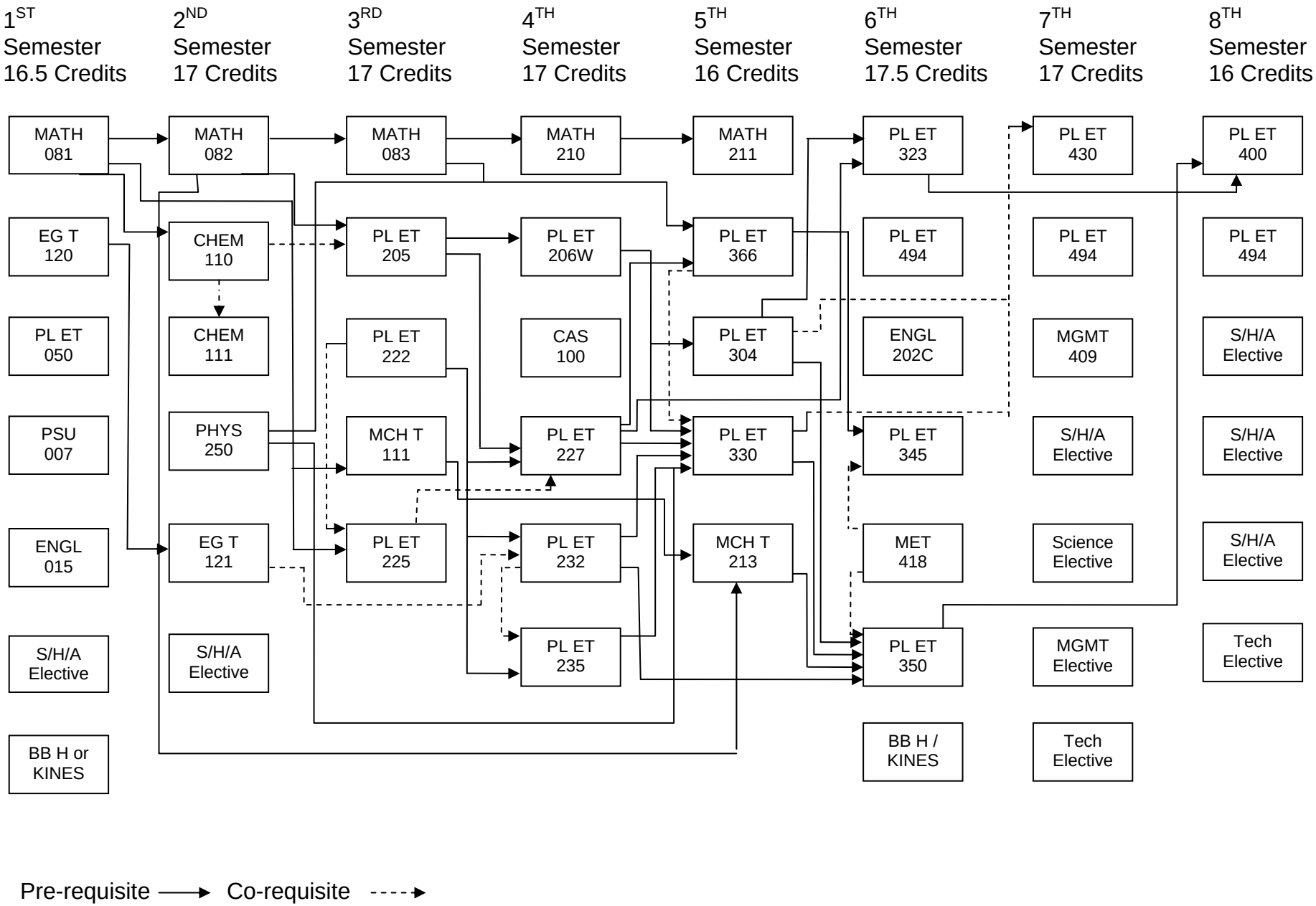

Pre-requisite ⟶ Co-requisite - - - - ▸